Simulation of a full-bridge inverter using 1200V GaNFET

- Effect of dead time and load inductance

Applicable GaNPower GaNFET:
GPIHV15DK;
GPIHV30DDP5L

GANPOWER INTERNATIONAL
鎵能國際半導體有限公司

Dec. 2019

© GaNPower International Inc.

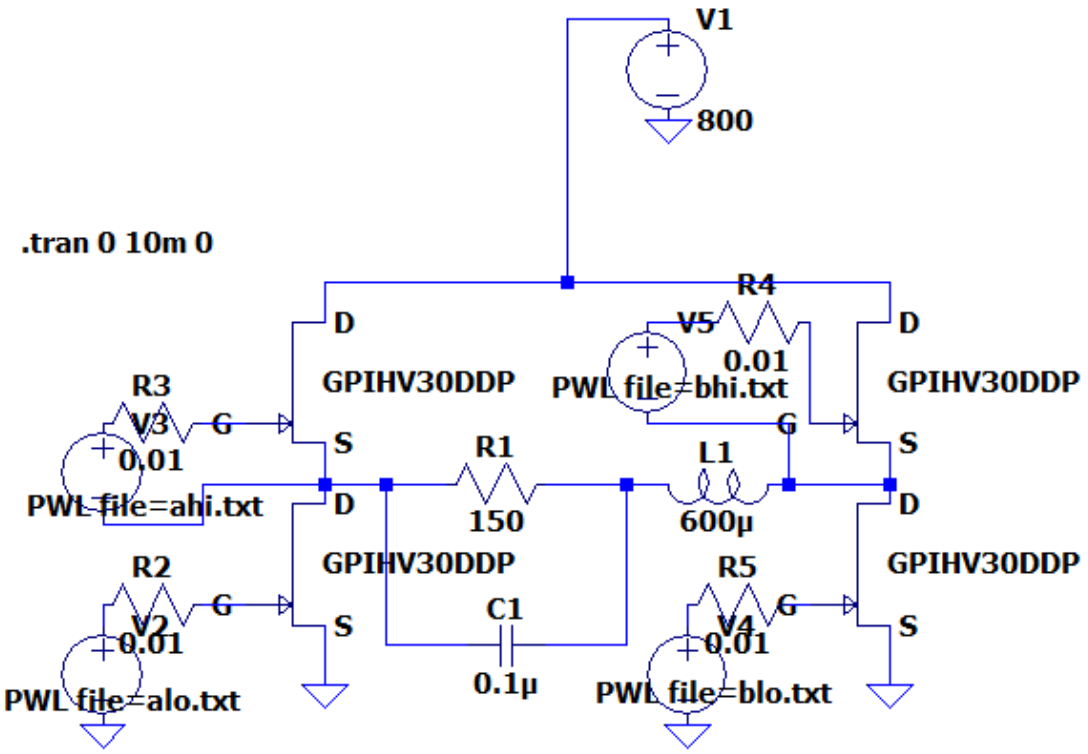


```
C:\deadtime40ns\full>sine_modulation.exe
 ==>GaNPower sine wave modulation program<==
 For tech support: iganpower.com
 This program uses input_fullbr.txt as input
 Explanation is contained within the input file.
 The output is PWM waveform for two half-bridge a,b
 Output files: alo.txt, ahi.txt
 Output files: blo.txt, bhi.txt

 ==> Please enter to generate data
```

```
6.          #vmax  --- full-bridge inverter PWM generator input
40.e-9       #deadtime or leadtime
5.e-9       #rise/fall time
100.        #ACline frequency for one halfbridge
-90.         #ACline sine wave initial phase angle in degrees
250000.        #switching freq
3           #number of ACline cycle to generate PWM
-9999       #if positive, the on-time of double pulse trigger pulse
```

© GaNPower International Inc.

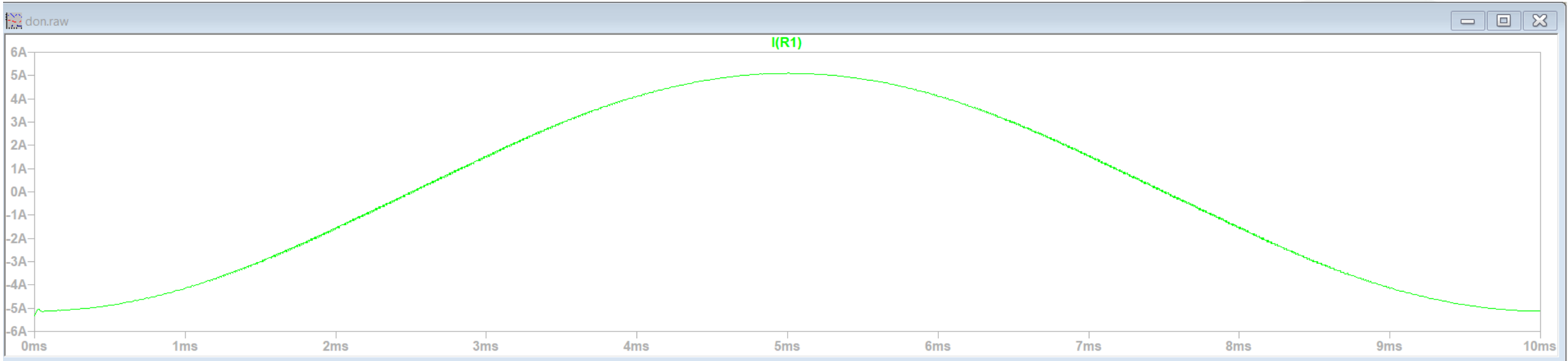
don.raw
I(R1)
6A
5A
4A
3A
2A
1A
0A
-1A
-2A
-3A
-4A
-5A
-6A
0ms
1ms
2ms
3ms
4ms
5ms
6ms
7ms
8ms
9ms
10ms

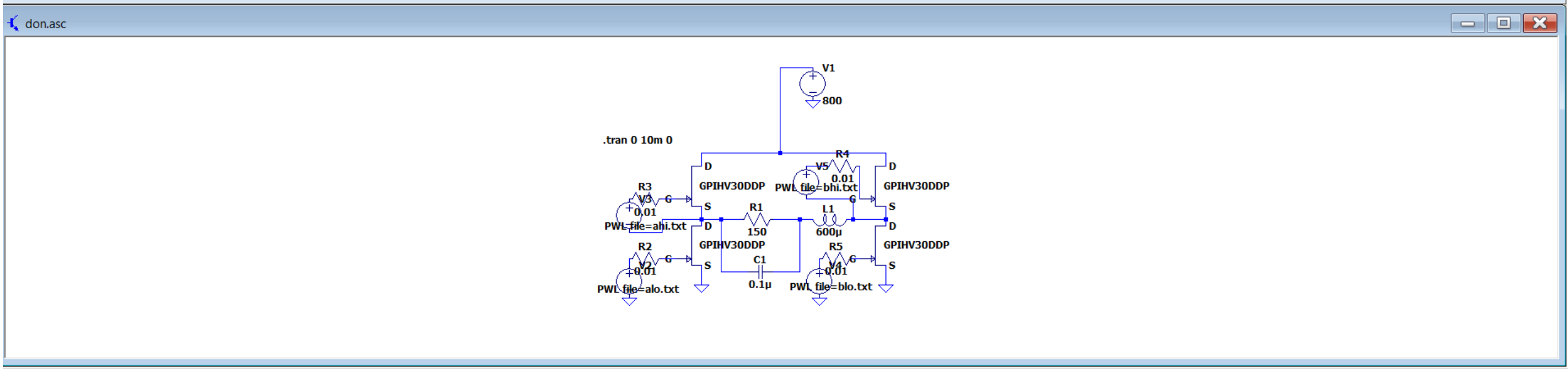
don.asc
V1
800
.tran 0 10m 0
R4
V5
0.01
PWL file=bhi.txt
D
GPIHV30DDP
S
G
R3
V3
0.01
PWL file=ahi.txt
R1
150
L1
600µ
R2
V2
0.01
PWL file=alo.txt
C1
0.1µ
R5
V4
0.01
PWL file=blo.txt

```
C:\deadtime40ns\full>halfbridge_power_ltspice.exe
 Welcome to GaNPower Half Bridge
   Power Loss Calculator
   Input control is input.txt
 Please hit return to run the calculator or
 enter i for information on the calculator

-->> Average Vd*Id power loss:
 Power loss for low side (W)=   5.01576953227360
 Power loss for hi side (W)=   4.91863864512995
 Average load power (W)=   1926.83165786620
 Percent power loss=  0.515582569802961
 -->>
   Please enter again to close the program
```

X2 for full-bridge

© GaNPower International Inc.

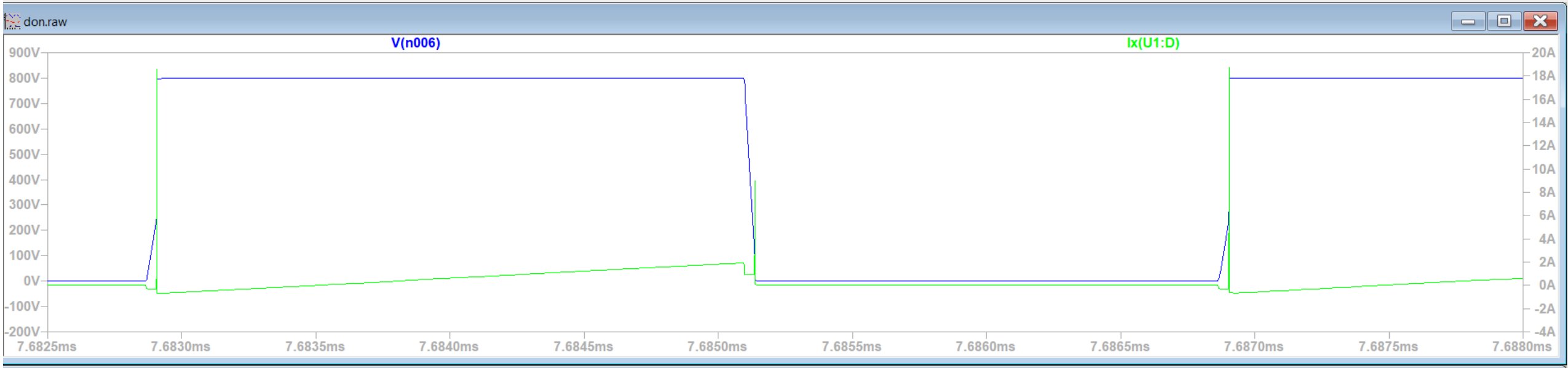

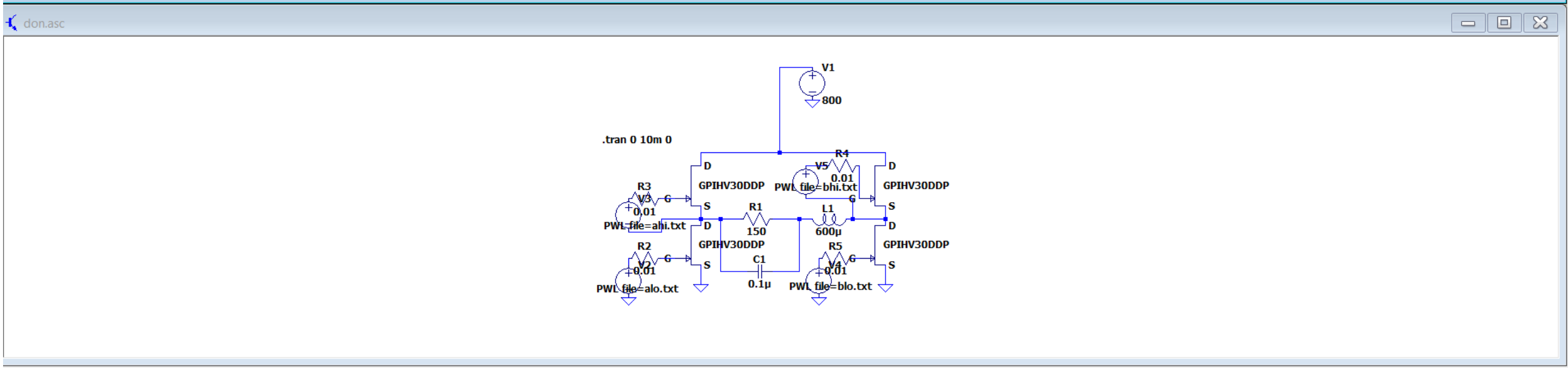

© GaNPower International Inc.

Charging gate resistors do not help improve power efficiency for GaNFET switch

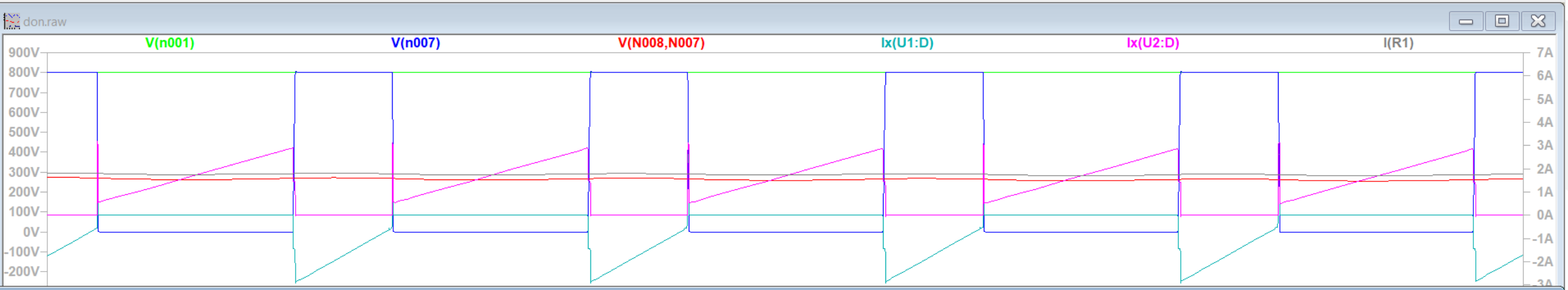

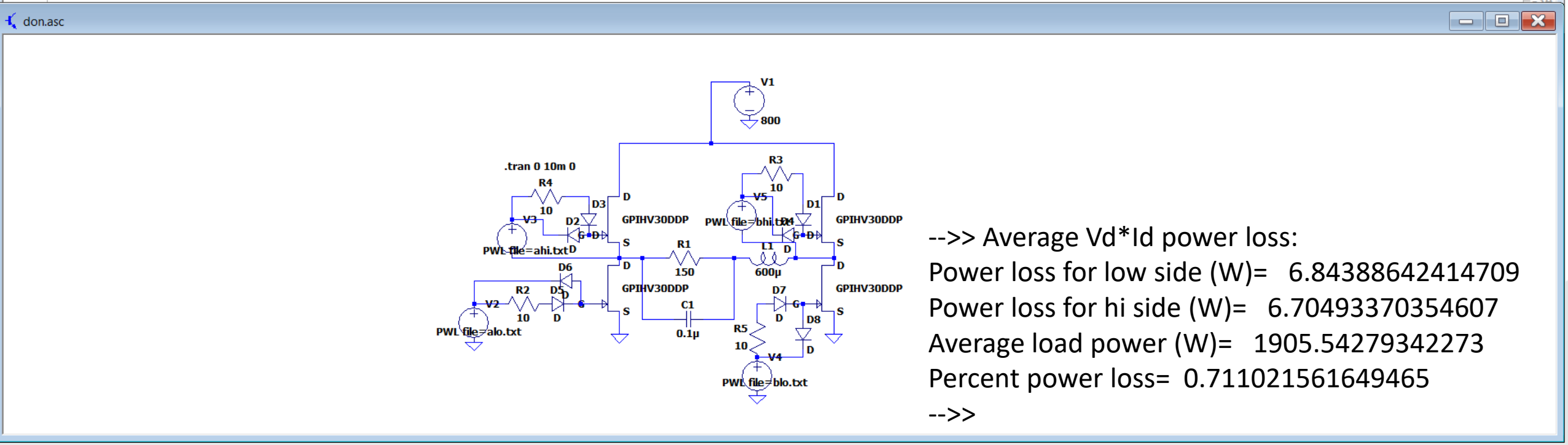

-->> Average Vd*Id power loss:
Power loss for low side (W)= 6.84388642414709
Power loss for hi side (W)= 6.70493370354607
Average load power (W)= 1905.54279342273
Percent power loss= 0.711021561649465
-->>

© GaNPower International Inc.

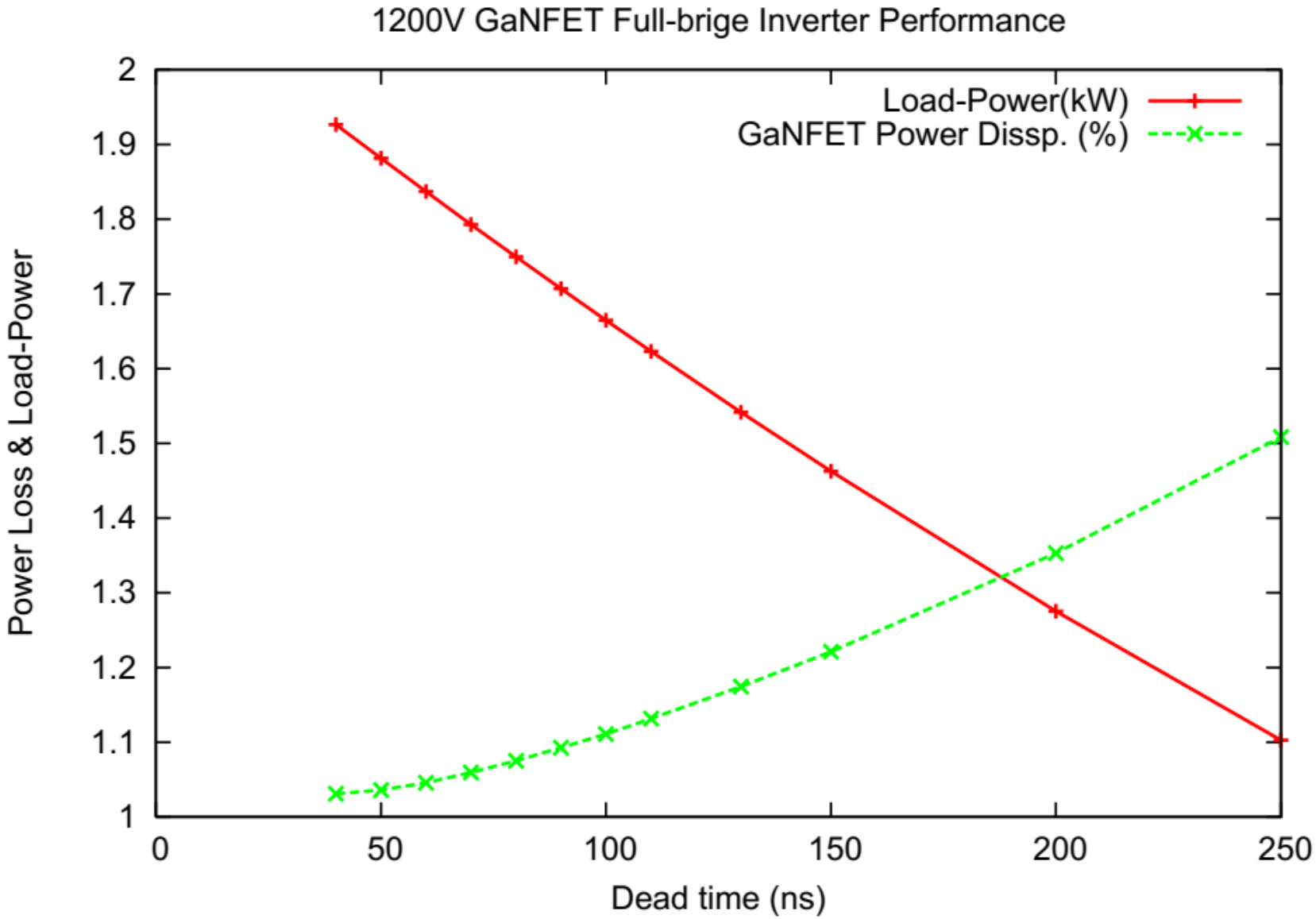

Explanation:
Larger dead time causes more high order oscillation or harmonic distortion of output waveforms. Power is reduced after filtering of load inductance.
GaNFET power loss is also higher due to such distortion/oscillation.

© GaNPower International Inc.

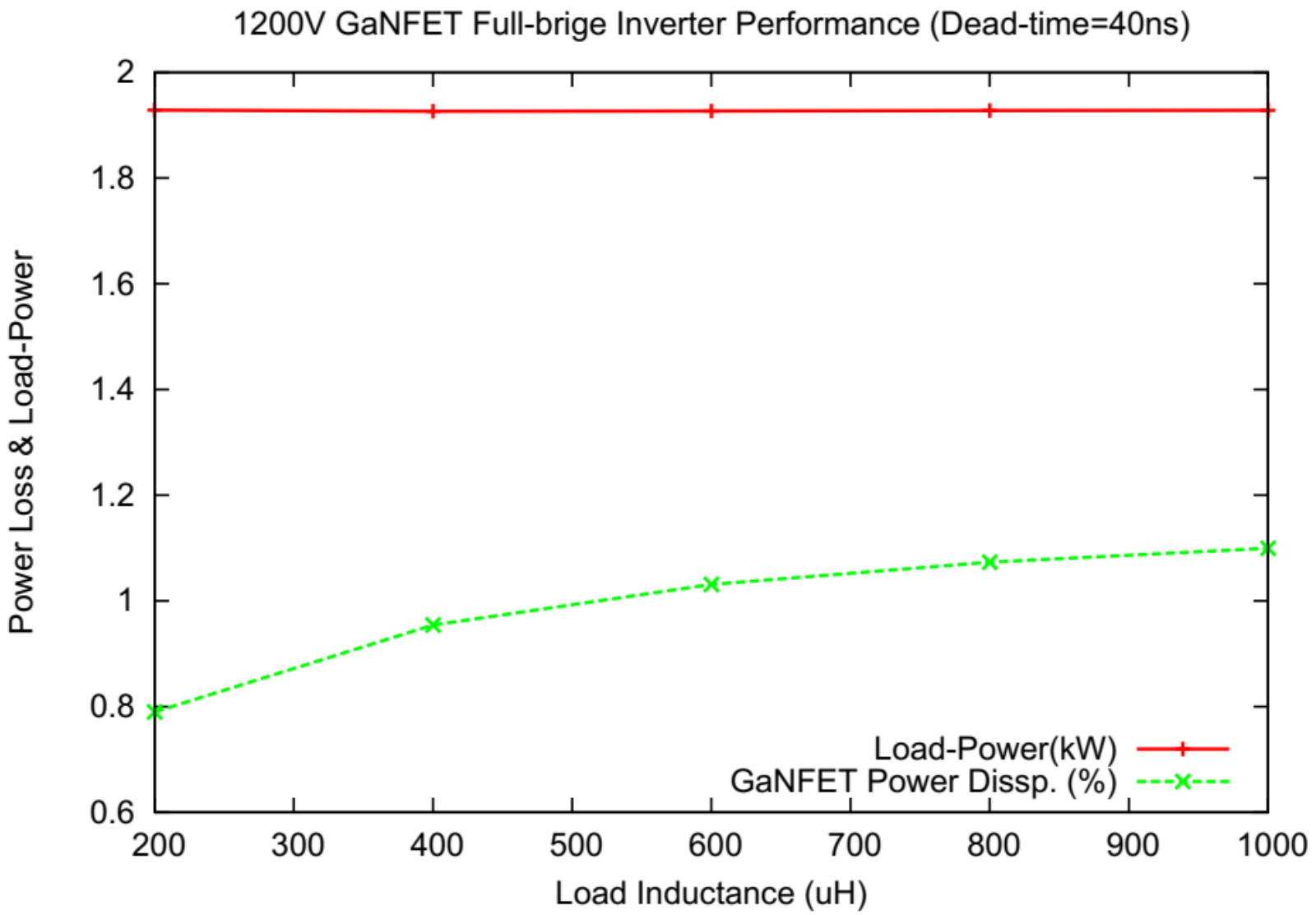

Explanation:
Small Coss of GaNFET matches to lower load inductance in output power loop.

© GaNPower International Inc.

Thanks for Your Attention!

© GaNPower International Inc.